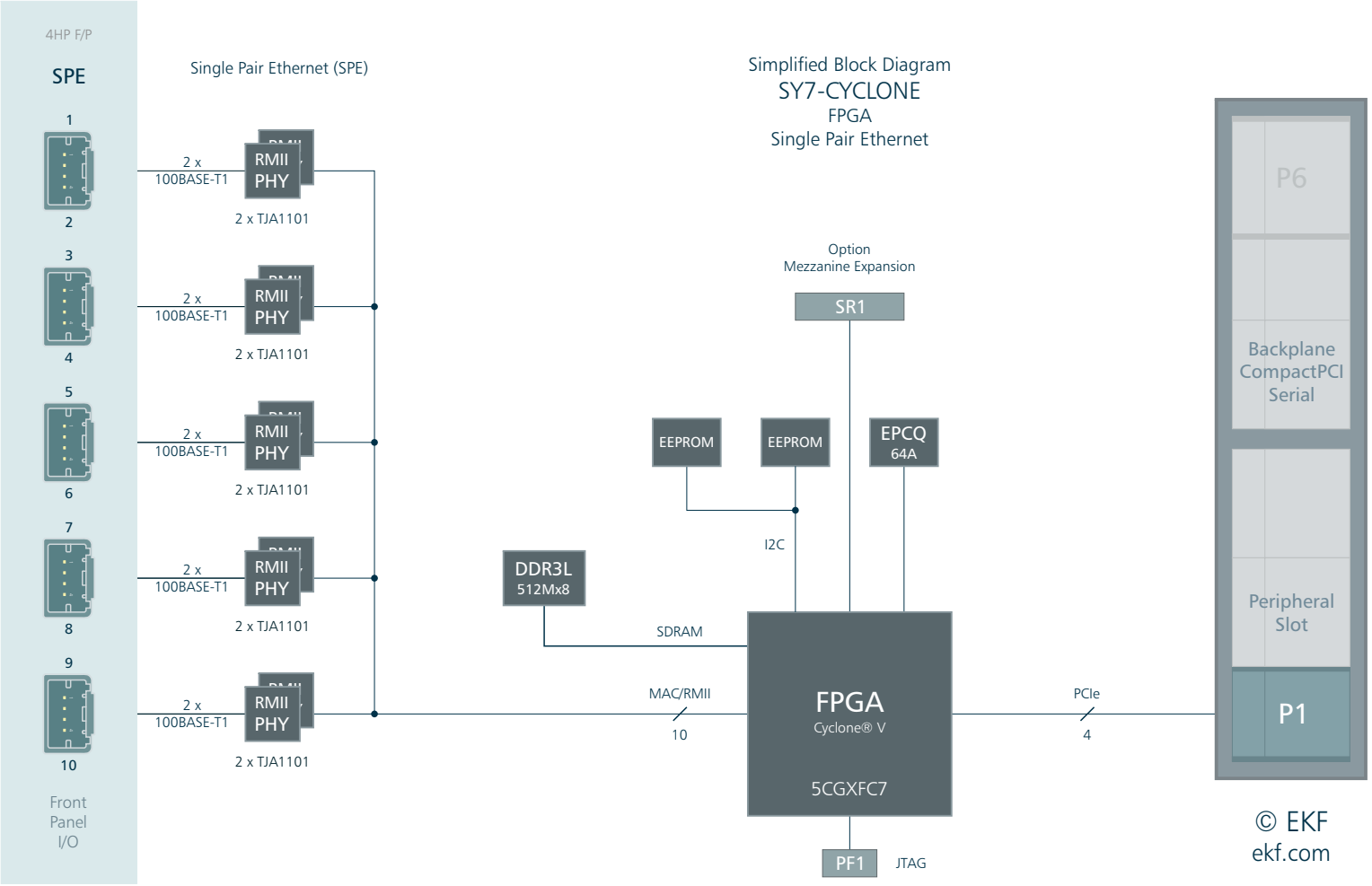
4HP F/P
SPE
1
2
3
4
5
6
7
8
9
10
Front Panel I/O
Single Pair Ethernet (SPE)
2 x 100BASE-T1
RMII PHY
2 x TJA1101
Simplified Block Diagram
SY7-CYCLONE
FPGA
Single Pair Ethernet
Option
Mezzanine Expansion
SR1
EEPROM
EEPROM
EPCQ 64A
I2C
DDR3L 512Mx8
SDRAM
MAC/RMII
10
FPGA
Cyclone® V
5CGXFC7
PF1
JTAG
PCIe
4
P6
Backplane CompactPCI Serial
Peripheral Slot
P1

© EKF
ekf.com