Simplified Block Diagram

AJ100 Power Injector
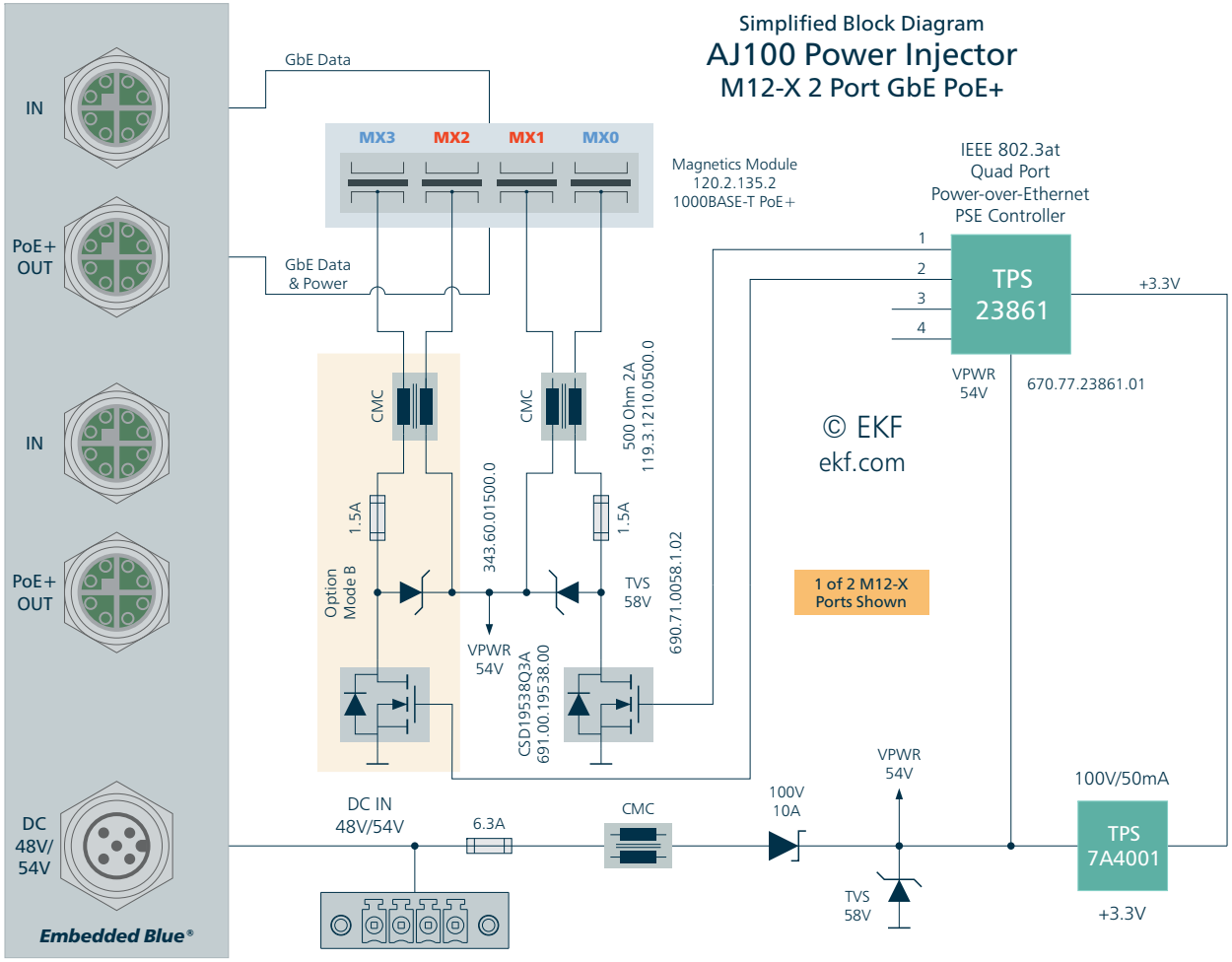
M12-X 2 Port GbE PoE+